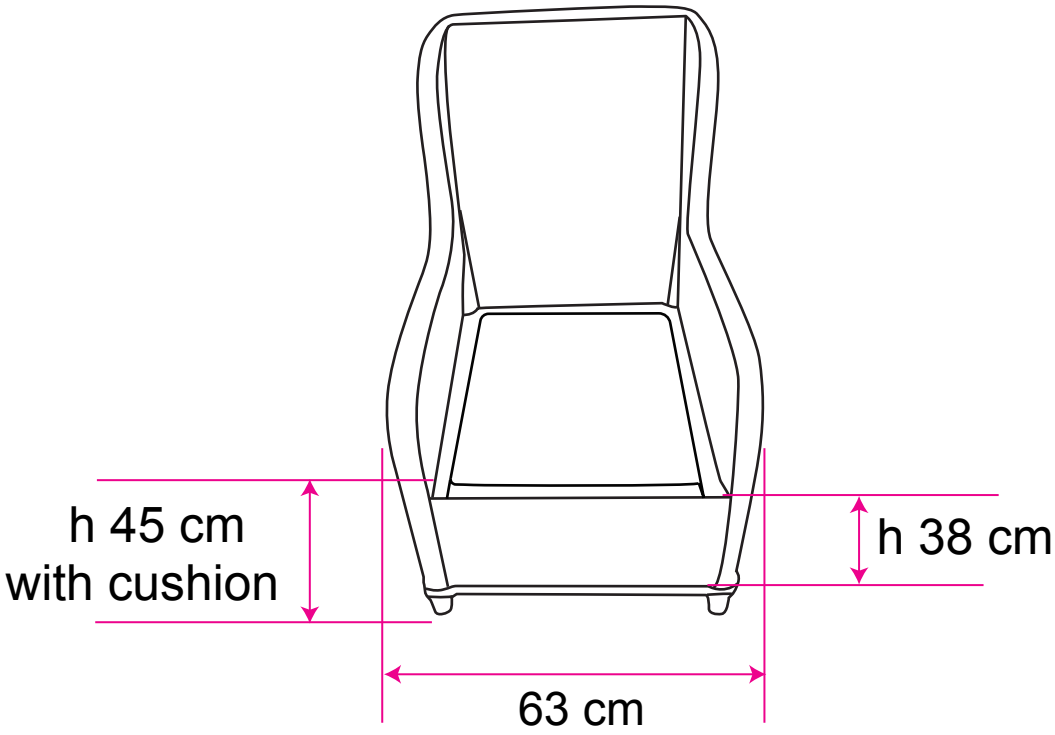
h 45 cm
with cushion
h 38 cm
63 cm

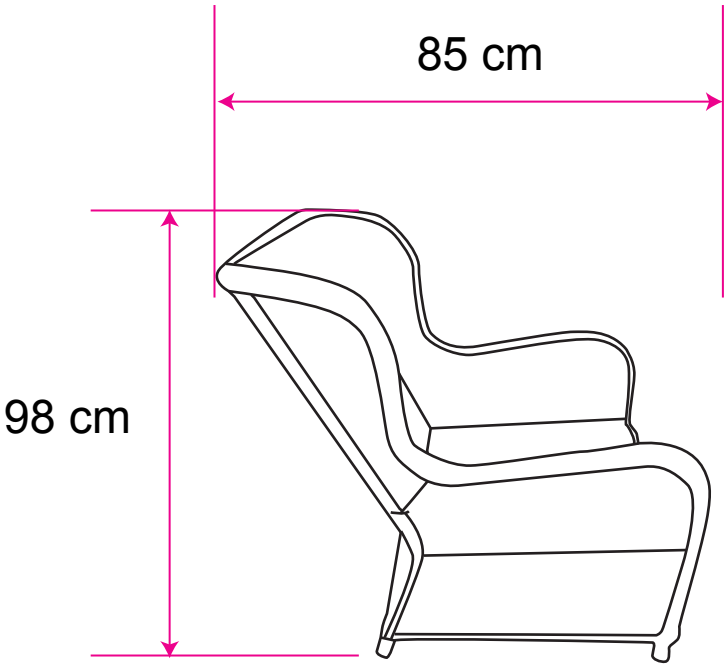
85 cm
98 cm

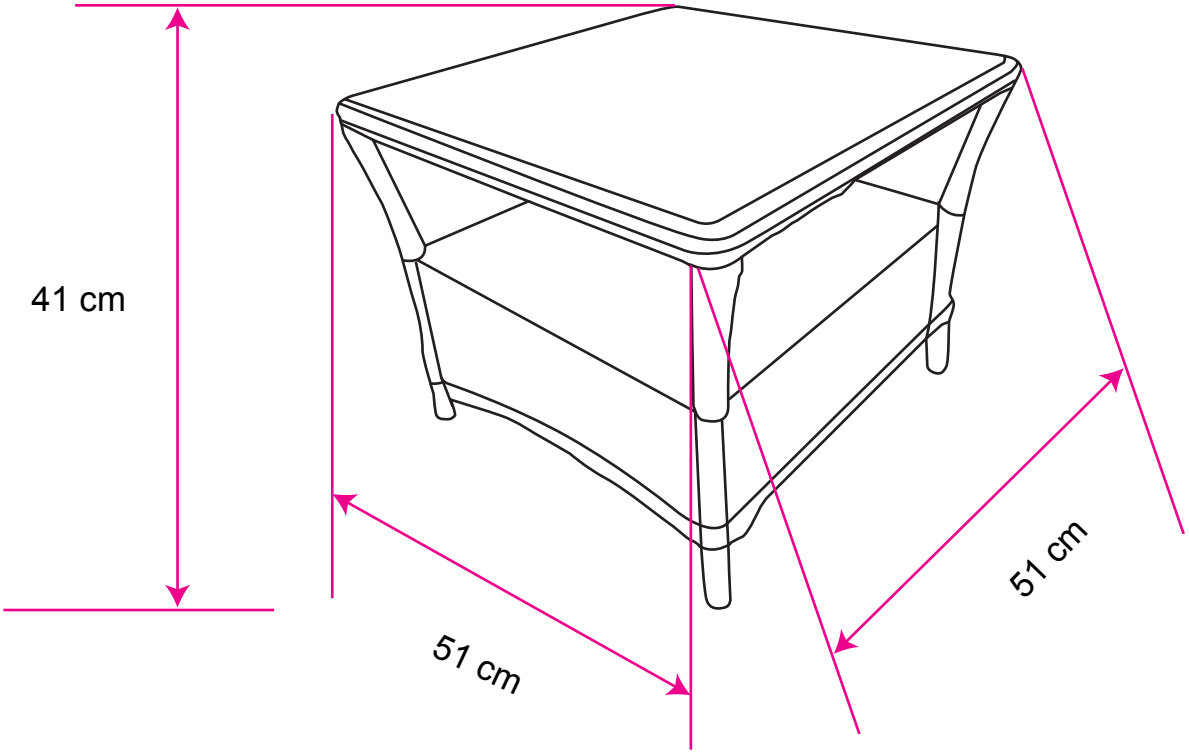
41 cm
51 cm
51 cm

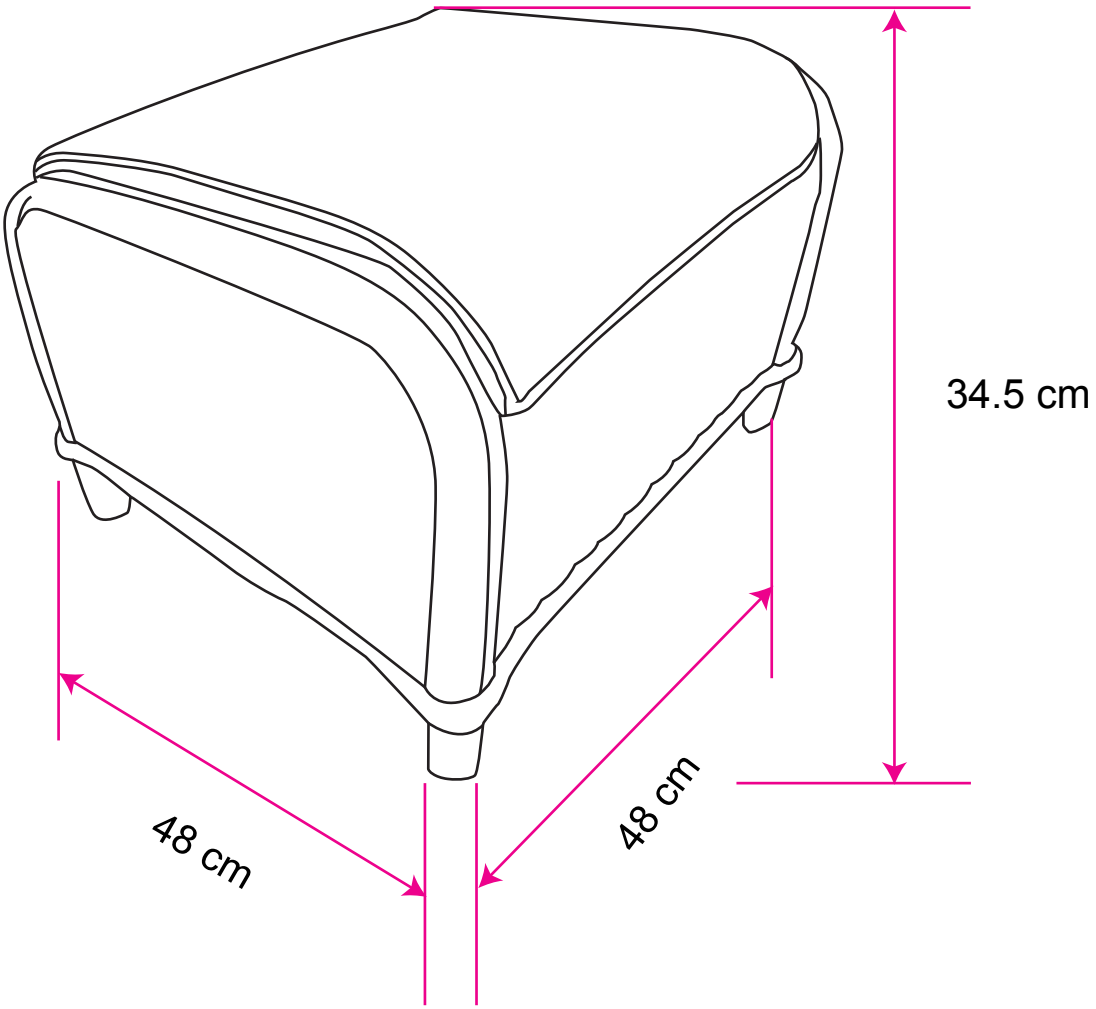
34.5 cm
48 cm
48 cm